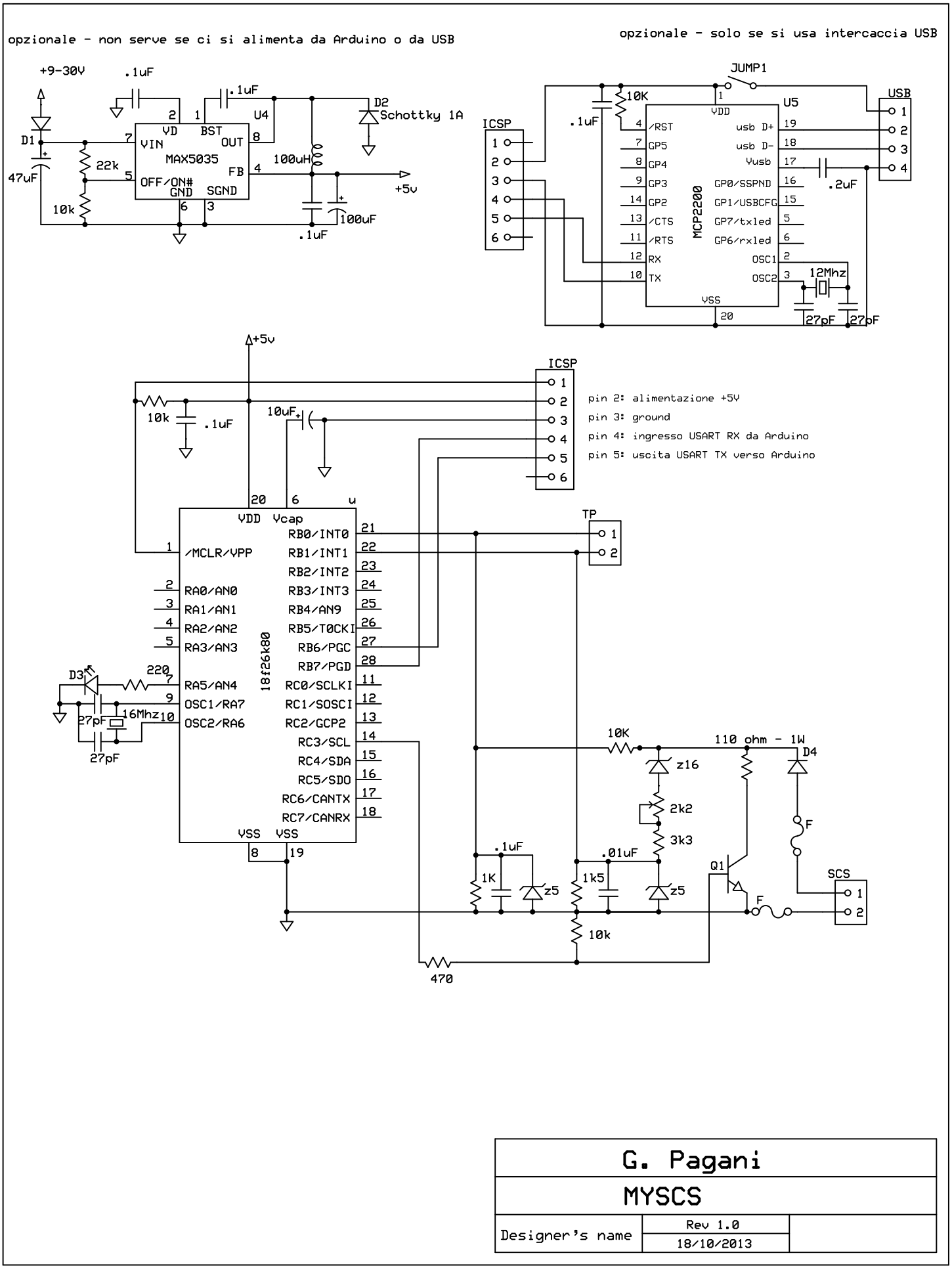

G. Pagani		
MYSCS		
Designer's name	Rev 1.0 18/10/2013	